GAS DETECTION Macurco

NEW for Fall 2012

Macurco™ Nitrogen Dioxide Detector

TX-6-ND

Detector, Controller and Transducer

ETL LISTED US
Intertek

Nitrogen Dioxide Detection and Control

The Macurco TX-6-ND is a low voltage, dual relay Nitrogen Dioxide (NO_2) detector, controller and transducer. The TX-6-ND has selectable 4-20 mA output, buzzer and digital display options. It is an electronic detection system used to measure the concentration of NO_2 and provide feedback and automatic exhaust fan control to help reduce NO_2 concentrations in parking garages, maintenance facilities or other commercial applications. The TX-6-ND is a low level meter capable of displaying from 0-20 ppm of Nitrogen Dioxide.

Selectable options include:

- Fan relay actuation: selectable from 0.2 to 5.0 ppm NO_2
- Output: Fan relay, Alarm relay and 4-20mA current loop
- Controls: Digital display (0-20 ppm), buzzer, fan delay, fan minimum runtime

Installation

- Mounts on a standard 4” x 4” electrical box
- 5 A SPDT fan relay controls valves, louvers or exhaust fans
- 0.5 A N.O. or N.C alarm relay connects to warning devices or control panels
- 4-20mA current loop - compatible with the Macurco DVP-120 Control Panel
- Factory calibrated

PROTECTION Macurco 1972 40 Years 2012 PREVENTION & VALUE

Other Features

- Supervised system design: detector problem will cause the fan & alarm relay to activate
- Optional calibration kit allows the TX-6-ND to be field tested and calibrated
- ETL Listed to UL 61010-1

Manufactured by Aerionics, Inc. Round Rock, TX – Phone: 1-877-367-7891 – Email: info@aerionicsinc.com – www.macurco.com

TX-6-ND Specifications

- Power: 3 W (max) from 12 to 24 VAC or 12 to 32 VDC
- Current @ 24 VDC: 75 mA in alarm, 50 mA fan relay on and 23 mA stand by
- Shipping Weight: 1 pound (0.45 kg)
- Size: 4 1/2 x 4 x 2 1/8 in. (11.4 X 10.2 X 5.4 cm)
- Color: Dark gray
- Connections: plugs/terminals
- Mounting box: (not included) 4x4 electric
- Fan relay: 5 A, 240 VAC, pilot duty, SPDT
- Fan relay actuation: selectable at OFF, 0.2, 0.5, 0.7, 1.0, 1.2, 1.5, 1.7, 2.0, 2.2, 2.5 (default), 2.7, 3.0, 3.2, 3.5, 3.7, 4.0, 4.2, 4.5, 4.7, 5.0 ppm
- Fan Delay Settings of 0, 1, 3 (default), 5 and 10 minutes
- Fan Minimum Runtime settings are OFF (default), 3, 5, 10 or 15 minutes
- Alarm relay: 0.5A 120 V, 60 VA
- Alarm relay actuation: selectable N.O. default or N.C.
- Alarm relay settings: 1 - 20 ppm NO_2
- Current Loop, 4-20 mA for 0-20 ppm NO_2
- Operating Environ: 0°F to 125° F (-18°C or above 52°C).10 to 90% RH

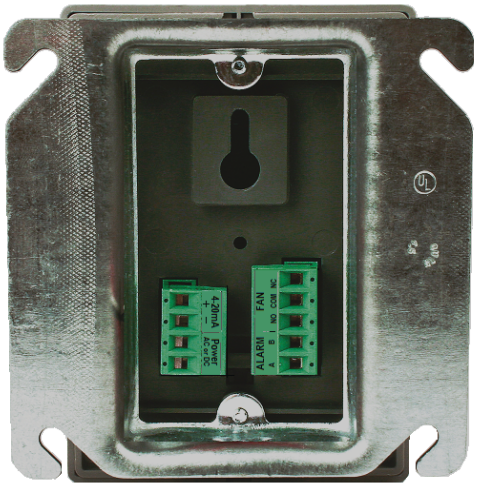

TX-6-ND Rear View

Location

A TX-6-ND is normally mounted at breathing level, about 5 feet (1.5 meters) above the floor on a wall or column in a central area where air movement is generally good. The unit, on average, can cover about 5,000 sq. ft. (465 sq. meters). The coverage depends on air movement within the room or facility. Extra detectors may be needed near any areas where people work or where the air is stagnant. The TX-6-ND mounts on a 4x4 electrical box supplied by the contractor. Do not install the TX-6-ND inside another box unless it has good air flow through it. Do NOT mount the TX-6-ND where the normal ambient temperature is below below 0°F or exceeds 125°F (below -18°C or above 52°C).

TYPICAL CONNECTION OF TX-6-ND

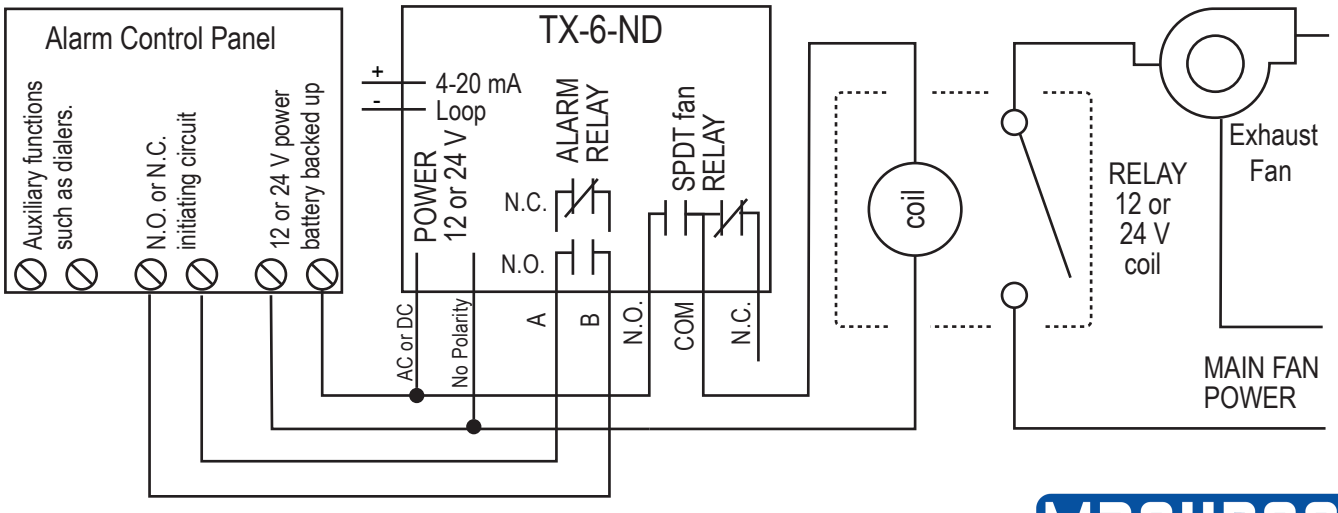

TYPICAL COVERAGE 5,000 SQUARE FEET

Made in the U.S.A. with US and imported materials

© Aerionics 2012. All rights reserved.
Macurco is a trademark of Aerionics, Inc.

MACURCO
Gas Detection Experts